Spring Plungers FST-LOCK-HD

Stroke 50 mm and 100 mm

UNIVERSAL AUTOMOTIVE

Spring Plungers FST-LOCK-HD

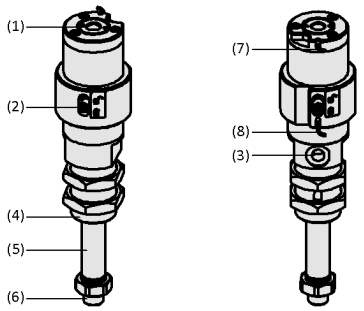

System design Spring Plungers FST-LOCK-HD

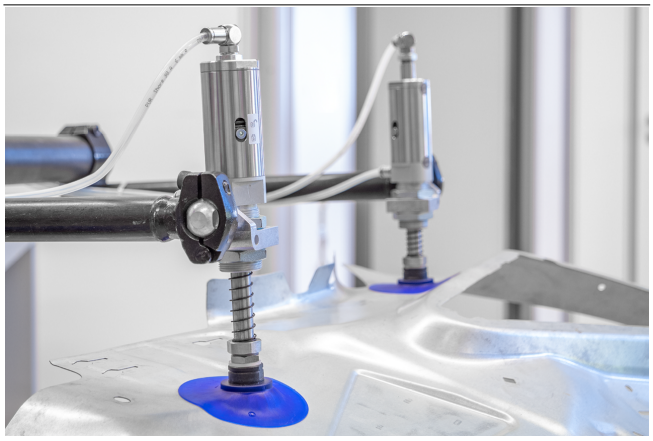

Spring plungers FST-LOCK-HD when handling an automotive part

Suitability for industry specific applications

Application

- Spring plunger for careful handling of flexible 3D components as well as for regular product changes
- Highly responsive, lockable design for safe and reliable operation even in harsh usage conditions
- Spring plunger with damping spring and special sliding bearings for handling of workpieces with differing heights, such as curved metal sheets, etc.
- Handling of sensitive workpieces (such as sheets of glass) without additional control functions to prevent damage, since the plunger ensures soft placement
- For handling tasks with very dynamic motion and short cycle times

Design

- Vacuum connection and axial vacuum feedthrough provided (1) by plunger rod
- Locking unit (2) with display window for switching state (locked/movable)
- Compressed air connection (3)
- Mounting thread and block protector for spring (4)
- Plunger rod with spring (5) and connection thread for suction cup (6)
- Display of basic position (7) and locking (8) by means of sensors (SFP variant)

Product highlights

- Infinitely lockable plunger stroke allows a wide range of applications
- Position is held securely in the event of compressed air failure
- Durable damping springs thanks to block protection
- High-quality, very smooth-running sliding bearings for demanding applications and short cycle times
- Suitable connection threads for a wide range of suction cups

© J. Schmalz GmbH / Reserve technical changes / generated on: 05.04.2025

Contact Schmalz: J. Schmalz GmbH, Johannes-Schmalz-Str. 1 • 72293 Glatten • +49 7443 2403-105 • kundencenter@schmalz.de

Spring Plungers FST-LOCK-HD

Stroke 50 mm and 100 mm

Designation code Spring Plungers FST-LOCK-HD

FST-LOCK-HD	–	G1/4-AG	–	50	–	NC	–	AB
1		2		3		4		5

1 – Abbreviated designation

Code	Version
FST-LOCK-HD	FST-LOCK-HD

2 – Connection

Code	Connection
G1/4-AG	G1/4-AG (AG = male (M))
G3/8-AG	G3/8-AG (AG = male (M))

3 – Plunger stroke

Code	Plunger stroke in mm
50…100	50 to 100

4 – Idle position

Code	Type
NC	Closed without pressure

5 – Product addition

Code	Type
AB	Anti block

Spring plunger FST-LOCK-HD is delivered as a ready-to-connect product.

Ordering data Spring Plungers FST-LOCK-HD

Type*				Plunger stroke in mm: 50	100
FST-LOCK-HD	G1/4-AG	-	AB	10.01.02.01535	10.01.02.01629
FST-LOCK-HD	G1/4-AG	SFP	VG	10.01.02.01730	10.01.02.01798
FST-LOCK-HD	G3/8-AG	-	AB	10.01.02.01628	10.01.02.01633

*Recommendation: To raise the lifetime in continuous operation, prevent the maximal slide stroke

Ordering data Spare parts Spring Plungers FST-LOCK-HD

Type		Proximity switch	Setscrew
FST-LOCK-HD	SFP	21.01.09.00127	20.05.07.00025

Ordering data Accessories Spring Plungers FST-LOCK-HD

Accessories		Part no.
Plug union, straight	STV-GE G1/8-AG 6	10.08.02.00204
Plug union, elbow	STV-W G1/8-AG 6	10.08.02.00158
Vacuum hose (meter)	VSL 6-4 PU MI-TR	10.07.09.00002
Holder tooling spring plunger	HT-FST A3 42 M30x1.5	10.07.06.00472
Holder tooling spring plunger	HT-FST A5 42 M30x1.5	10.07.06.00473

Contact Schmalz: J. Schmalz GmbH, Johannes-Schmalz-Str. 1 • 72293 Glatten • +49 7443 2403-105 • kundencenter@schmalz.de

Spring Plungers FST-LOCK-HD

Stroke 50 mm and 100 mm

Technical data Spring Plungers FST-LOCK-HD

Type	Spring rate [N/mm]	Spring pretension [N]	Spring force center [N]*	Vertical load [N]**	Horizontal load [N]***	Anzugsdrehmoment (max) [Nm]	Weight [g]	Operating temperature [°C]
FST-LOCK-HD G1/4-AG 50 NC AB	0.453	1.40	12.8	1,500	300	50	735	0 ... 80 °C
FST-LOCK-HD G1/4-AG 50 NC VG SFP	0.453	1.40	12.8	1,500	300	50	995	0 ... 50 °C
FST-LOCK-HD G3/8-AG 50 NC AB	0.453	1.40	12.8	1,500	300	50	735	0 ... 80 °C
FST-LOCK-HD G1/4-AG 100 NC AB	0.328	3.28	19.7	1,500	150	50	895	0 ... 80 °C
FST-LOCK-HD G1/4-AG 100 NC VG SFP	0.328	3.28	19.7	1,500	150	50	1,070	0 ... 50 °C
FST-LOCK-HD G3/8-AG 100 NC AB	0.328	3.28	19.7	1,500	150	50	895	0 ... 80 °C

*Referred to 50 % of operating stroke
**Maximum static loading
***The specification of the horizontal load refers to the lower edge of the plunger with extended spring. It is a maximum static stress and it impairs the spring compression and extension in horizontal position.

Contact Schmalz: J. Schmalz GmbH, Johannes-Schmalz-Str. 1 • 72293 Glatten • +49 7443 2403-105 • kundencenter@schmalz.de

Spring Plungers FST-LOCK-HD

Stroke 50 mm and 100 mm

Design data Spring Plungers FST-LOCK-HD

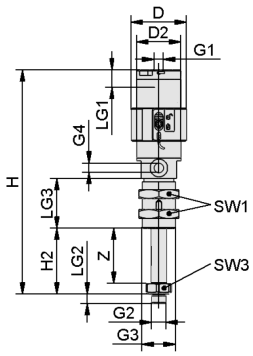

FST-LOCK-HD-SFP

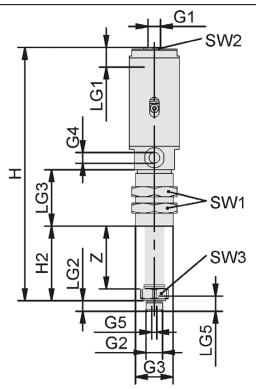

FST-LOCK-HD

Contact Schmalz: J. Schmalz GmbH, Johannes-Schmalz-Str. 1 • 72293 Glatten • +49 7443 2403-105 • kundencenter@schmalz.de

Spring Plungers FST-LOCK-HD

Stroke 50 mm and 100 mm

Design data Spring Plungers FST-LOCK-HD

Type	D [mm]	D2 [mm]	G1	G2	G3	G4	H [mm]	H2 [mm]	LG1 [mm]	LG2 [mm]	LG3 [mm]	SW1 [mm]	SW2 [mm]	SW3 [mm]	Z (Stroke) [mm]
FST-LOCK-HD G1/4-AG 50 NC AB	-	-	G1/8"-F	G1/4"-M	M30x1.5-M	G1/8"-F	202.0	59.3	12	8.5	45	36	17	22	50
FST-LOCK-HD G1/4-AG 50 NC VG SFP	50	40	G1/8"-F	G1/4"-M	M30x1.5-M	G1/8"-F	202.3	59.3	12	8.5	45	36	-	22	50
FST-LOCK-HD G3/8-AG 50 NC AB	-	-	G1/8"-F	G3/8"-M	M30x1.5-M	G1/8"-F	202.8	59.8	12	8.0	45	36	17	22	50
FST-LOCK-HD G1/4-AG 100 NC AB	-	-	G1/8"-F	G1/4"-M	M30x1.5-M	G1/8"-F	267.3	109.3	12	8.5	60	36	17	22	100
FST-LOCK-HD G1/4-AG 100 NC VG SFP	50	40	G1/8"-F	G1/4"-M	M30x1.5-M	G1/8"-F	267.3	109.3	12	8.5	60	36	-	22	100
FST-LOCK-HD G3/8-AG 100 NC AB	-	-	G1/8"-F	G3/8"-M	M30x1.5-M	G1/8"-F	267.8	109.8	12	8.0	60	36	17	22	100

Contact Schmalz: J. Schmalz GmbH, Johannes-Schmalz-Str. 1 • 72293 Glatten • +49 7443 2403-105 • kundencenter@schmalz.de